DIMNS MARKED DENOTES (S) SAFETY/REGULATION (F) CRITICAL FIT/FUNCTION (M) MAJOR FIT/FUNCTION (M2) MINOR FIT/FUNCTION

DIM 'A'	DIM 'B'	FINISH GRIND Ø	PLATING THK. BEFORE POST CHROME GRINDING	PLATING THK. AFTER POST CHROME GRINDING (F)	Ø 'C'
166.2	124.2	Ø10.938–10.948	18±4 μm	15±4 μm	Ø10.960–10.986

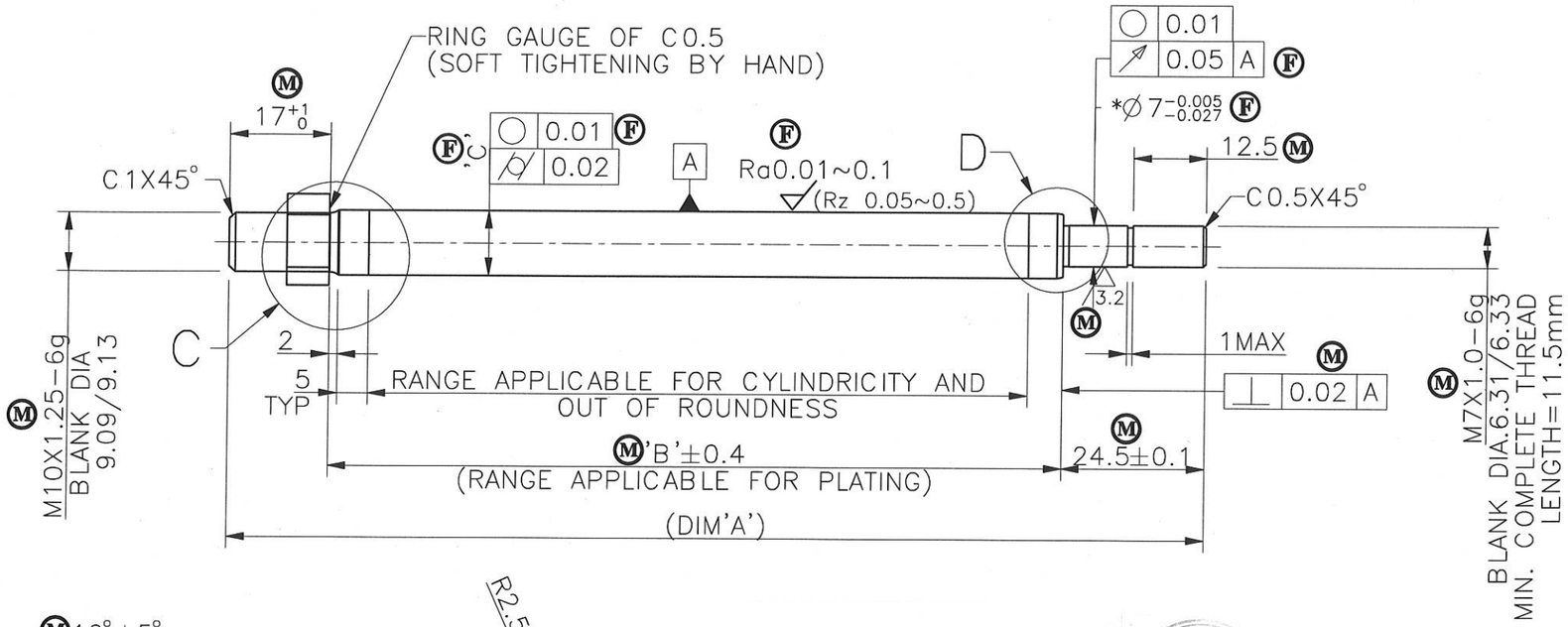

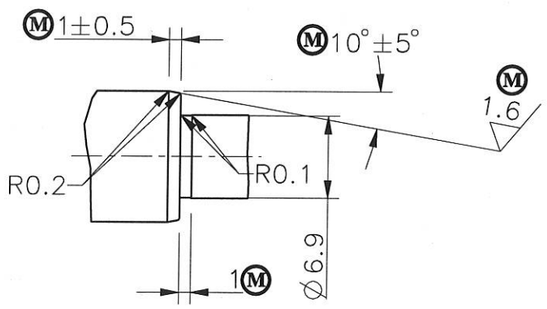

DETAIL D(2:1)

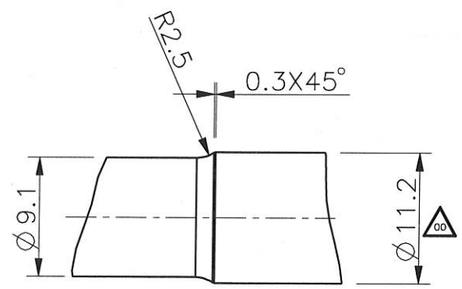

DETAIL C(2:1)

(PROFILE AT MACHINING STAGE)

MASTER COPY ONLY IF RED

NOTE:–

1.TO BE GROUND TO FINISH SIZE AFTER PLATING.MATERIAL REMOVAL 3~5μ ON DIAMETER.

(M) 2.MUST BE NO CHATTER, SCRATCH, ABRASION AND BRUISE ON SURFACE OF Ø11.

(M) 3.MUST BE FREE FROM PINHOLE, ROUGH SURFACE AND BLISTER AFTER PLATING.

(M) 4.CHROME HARDNESS :HV 800MIN./ 50gms LOAD.

5.PARTING PIP NOT PERMITTED.

(F) 6a.CORROSION RESISTANCE : UPTO 48Hrs. CASS TEST. RATING NO.7 MIN.

6b.PLATING VALIDATION : CORROSION RESISTANCE AS MENTIONED.OTHER PARAMETERS AS PER GSP 0103. (00)

7.'*'MARKED DIMENSION SHOULD BE CHECKED WITH GO AND NOGO RING GAUGE.

DATE	REV	ALTERATION	E.C.N.NO
13.08.18	00	MASS PRODUCTION RELEASED,PART NO. 34040655 WAS 34040315–T, NOTE 6b. REVISED, DIM Ø11.2 ADDED.	065–01
28.08.17	D0	NEW RELEASE.	D92/17

SUPERSEDES :34040315–T,REV D0

GENERAL TOLERANCE ASPER : –

DESIGN SOURCE REF.

RELEASE FOR: ☐ COSTING ☐ PROTOTYPE ☐ OTS ☐ PRE–PRODUCTION ■ PRODUCTION

GABRIEL INDIA LTD.

SCALE	SHEETS	FINISH:	MASS:
1:1	1 / 1	HARD CHROME PLATING	110 g

DRAWN BY MADHU Madhu DATE: 13.08.18

CHECKED BY VRISHALI Vrishali DATE: 13.08.18

APPROVED BY DIWAKAR BHAT Bhat DATE: 13.08.18

NAME:– PISTON ROD

MATERIAL:– BAR 3404010 (S) AS PER GP 136-5

PART NO:– 34040655 (00) REV. 00

ALL DIMENSIONS ARE IN MM. | NO MANUAL ALTERATION | DO NOT SCALE | IF IN DOUBT PLEASE ASK | SIZE : A3

CONFIDENTIAL: THIS DRAWING AND THE INFORMATION THEREIN ARE THE PROPERTY OF GABRIEL INDIA LTD., AND SHALL NOT BE REPRODUCED, COPIED RECORDED IN ANY MEDIA, USED FOR ANY OTHER PURPOSE OR DELIVERED AND/OR DISCLOSED TO ANY THIRD PARTY WITHOUT WRITTEN CONSENT OF GABRIEL.